DRAWING NO. 035-0023

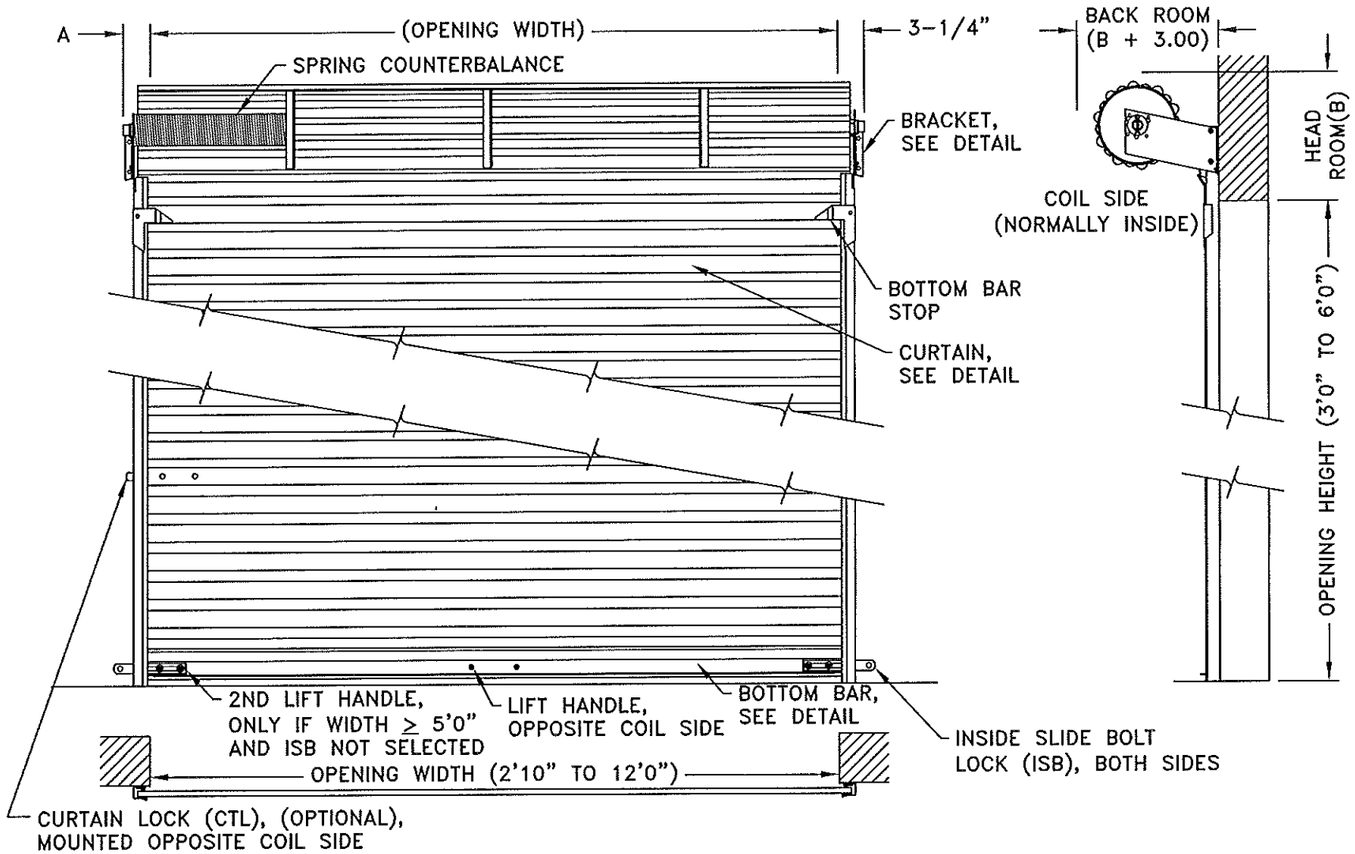

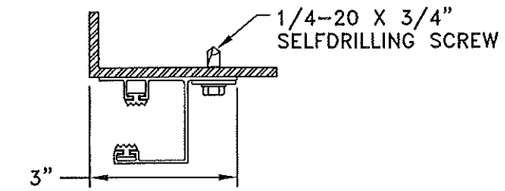

STEEL JAMB DETAIL

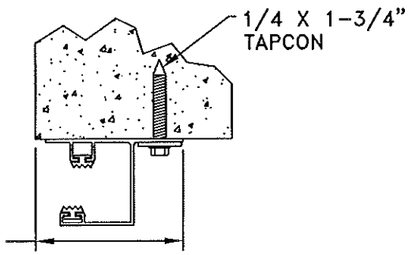

MASONRY JAMB DETAIL

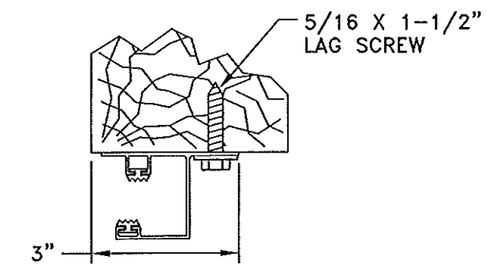

WOOD JAMB DETAIL

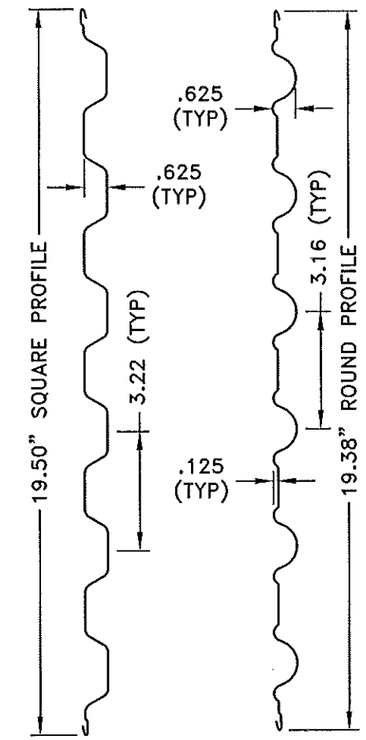

CURTAIN DETAIL

(26GA PAINTED GALV. STEEL)

BRACKET TYPE	A
BEARING BRACKET	3-1/4"
TENSION-PRO BRACKET	4"

OPENING HEIGHT	B
UP TO 6'0" HIGH	14"

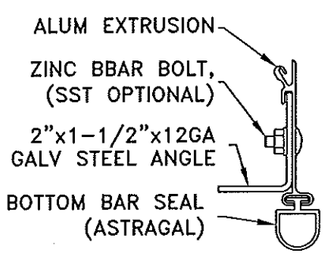

BOTTOM BAR DETAIL

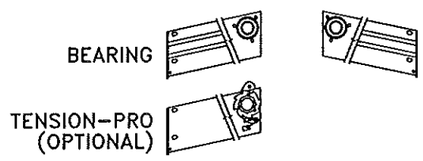

BRACKET DETAIL

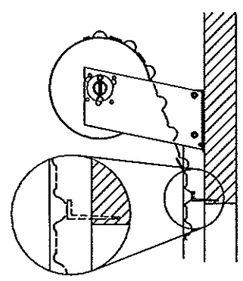

TOP DRAFT STOP DETAIL

(OPTIONAL)

NOTES:

1. WHEN USING LOCK BY OTHERS (LBO), STANDARD THROW SLIDE REQUIRED
2. TOP DRAFT STOP OPTIONAL
3. CURTAIN LOCK (CTL) HAND DETERMINED OUTSIDE LOOKING IN
4. DIMENSIONS SHOWN ARE APPROXIMATE. SEE INSTALL MANUAL FOR EXACT COMPONENT LOCATION

SALES ORDER NUMBER	DOOR MODEL	QTY	EXACT OPENING SIZE		OUTSIDE CURTAIN COLOR	JAMB TYPE			LH BRACKET TYPE		LOCK OPTIONS						OPTIONAL TOP DRAFT STOP?	OPTIONAL HOOD?	OTHER OPTIONS
	DS50		WIDTH	HEIGHT		MAS	STL	WOOD	BEARING	TENSION PRO	ISB BOTH	CTL RIGHT	CTL LEFT	CTL BOTH	LBO	NONE			

DS-50 COUNTER SHUTTER

CUSTOMER NAME

CUSTOMER NUMBER

PROJECT NAME

PROJECT LOCATION

CONTACT

PHONE NUMBER

FAX NUMBER

DATE

Wayne Dalton
Wayne Dalton Door & Systems Div.
2589 County Rd 168
Dundee, Ohio 44624

SIZE	DRAWING NO.	REVISION
B	035-0023	2